Cambridge Assessment International Education

Cambridge International AS & A Level

CANDIDATE NAME

CENTRE NUMBER

CANDIDATE NUMBER

0116320546

PHYSICS **9702/23**

Paper 2 AS Level Structured Questions **May/June 2025**

1 hour 15 minutes

You must answer on the question paper.

No additional materials are needed.

INSTRUCTIONS

- Answer **all** questions.
- Use a black or dark blue pen. You may use an HB pencil for any diagrams or graphs.
- Write your name, centre number and candidate number in the boxes at the top of the page.
- Write your answer to each question in the space provided.
- Do **not** use an erasable pen or correction fluid.
- Do **not** write on any bar codes.
- You may use a calculator.
- You should show all your working and use appropriate units.

INFORMATION

- The total mark for this paper is 60.
- The number of marks for each question or part question is shown in brackets [ ].

This document has **20** pages. Any blank pages are indicated.

© UCLES 2025

[Turn over

Data

acceleration of free fall	g	=	$9.81\ \text{m s}^{-2}$
speed of light in free space	c	=	$3.00 \times 10^{8}\ \text{m s}^{-1}$
elementary charge	e	=	$1.60 \times 10^{-19}\ \text{C}$
unified atomic mass unit	1 u	=	$1.66 \times 10^{-27}\ \text{kg}$
rest mass of proton	m_p	=	$1.67 \times 10^{-27}\ \text{kg}$
rest mass of electron	m_e	=	$9.11 \times 10^{-31}\ \text{kg}$
Avogadro constant	N_A	=	$6.02 \times 10^{23}\ \text{mol}^{-1}$
molar gas constant	R	=	$8.31\ \text{J K}^{-1}\ \text{mol}^{-1}$
Boltzmann constant	k	=	$1.38 \times 10^{-23}\ \text{J K}^{-1}$
gravitational constant	G	=	$6.67 \times 10^{-11}\ \text{N m}^2\ \text{kg}^{-2}$
permittivity of free space	ε_0	=	$8.85 \times 10^{-12}\ \text{F m}^{-1}$
	$\left(\frac{1}{4\pi\varepsilon_0}\right.$	=	$\left.8.99 \times 10^{9}\ \text{m F}^{-1}\right)$
Planck constant	h	=	$6.63 \times 10^{-34}\ \text{J s}$
Stefan–Boltzmann constant	σ	=	$5.67 \times 10^{-8}\ \text{W m}^{-2}\ \text{K}^{-4}$

Formulae

uniformly accelerated motion	s	=	$ut + \frac{1}{2}at^2$
	v^2	=	$u^2 + 2as$
hydrostatic pressure	Δp	=	$\rho g \Delta h$
upthrust	F	=	$\rho g V$
Doppler effect for sound waves	f_o	=	$\frac{f_\text{s} v}{v \pm v_\text{s}}$
electric current	I	=	$Anvq$
resistors in series	R	=	$R_1 + R_2 + \ldots$
resistors in parallel	$\frac{1}{R}$	=	$\frac{1}{R_1} + \frac{1}{R_2} + \ldots$

DO NOT WRITE IN THIS MARGIN

BLANK PAGE

DO NOT WRITE IN THIS MARGIN
DO NOT WRITE IN THIS MARGIN
DO NOT WRITE IN THIS MARGIN
DO NOT WRITE IN THIS MARGIN
DO NOT WRITE IN THIS MARGIN

1 **(a)** Define velocity.

.....

..... [1]

(b) In an experiment, two objects A and B are released from the side of a building, as shown in Fig. 1.1.

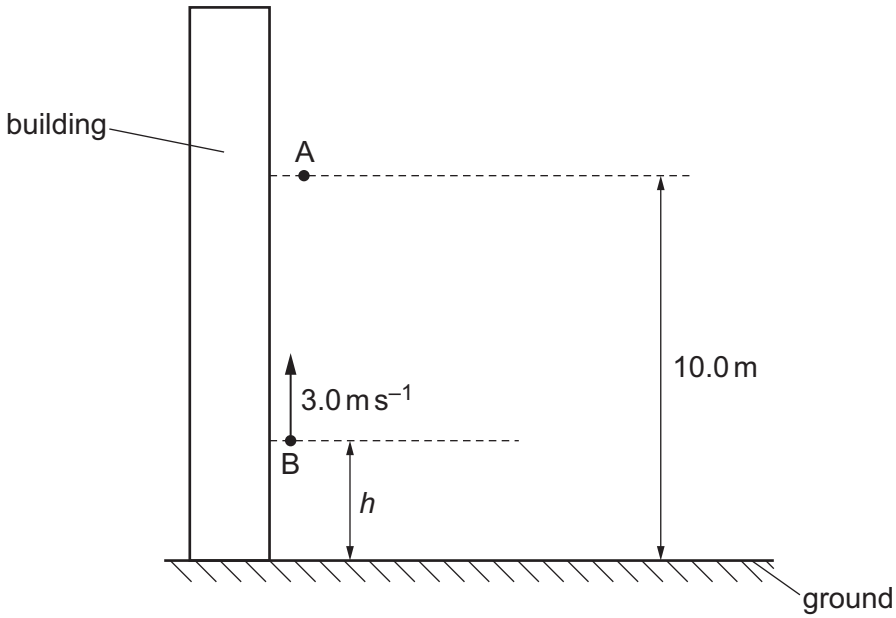

Fig. 1.1 (not to scale)

Object A is released from rest at a height of 10.0 m above horizontal ground.
Object B is released with an initial upward velocity of 3.0 m s^{-1} at a height *h* above the ground.
Both objects take the same time to reach the ground and they do not collide with each other.
Air resistance is negligible.

Calculate *h*.

h = ... m [3]

DO NOT WRITE IN THIS MARGIN

(c) In a second experiment, object B is released from the same height as in **(b)** but with a speed of $6.0\,m\,s^{-1}$ at an angle of 60° to the vertical, as shown in Fig. 1.2.

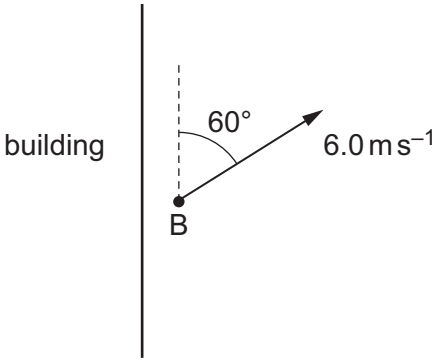

Fig. 1.2

(i) State and explain whether the time taken for object B to reach the ground is less than, the same as, or greater than the time taken in the first experiment.

.....

.....

..... [2]

(ii) By considering energy, state and explain whether the speed at which object B reaches the ground is less than, the same as, or greater than in the first experiment.

.....

.....

..... [2]

[Total: 8]

DO NOT WRITE IN THIS MARGIN
DO NOT WRITE IN THIS MARGIN
DO NOT WRITE IN THIS MARGIN
DO NOT WRITE IN THIS MARGIN
DO NOT WRITE IN THIS MARGIN

2 **(a)** Define the moment of a force about a pivot.

.....

..... [1]

(b) Three objects A, B and C are placed on a horizontal beam. The beam is in equilibrium, as shown in Fig. 2.1.

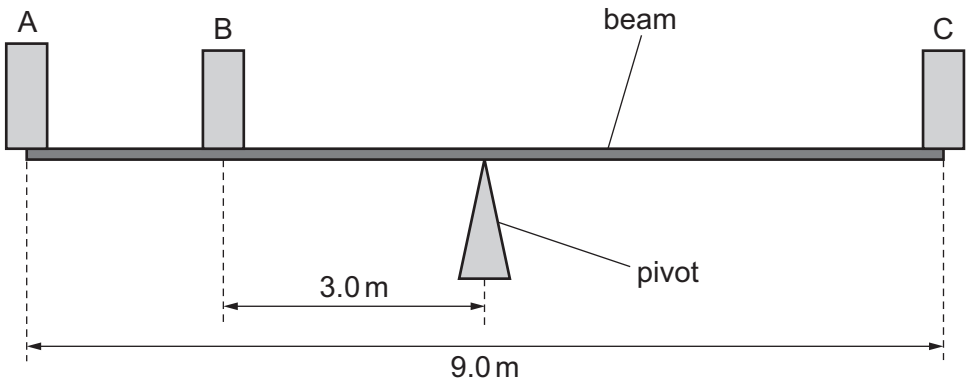

Fig. 2.1 (not to scale)

The beam is uniform and has length 9.0 m.
A pivot is at the midpoint of the beam.
Object A has mass 90 kg and is at one end of the beam.
Object B has mass *m* and is a distance of 3.0 m from the pivot.
Object C has mass 150 kg and is at the other end of the beam.

(i) Calculate *m*.

m = ... kg [3]

DO NOT WRITE IN THIS MARGIN
DO NOT WRITE IN THIS MARGIN
DO NOT WRITE IN THIS MARGIN
DO NOT WRITE IN THIS MARGIN
DO NOT WRITE IN THIS MARGIN

(ii) Object A is removed and replaced by a wire fixed to the end of the beam and to the ground, as shown in Fig. 2.2.

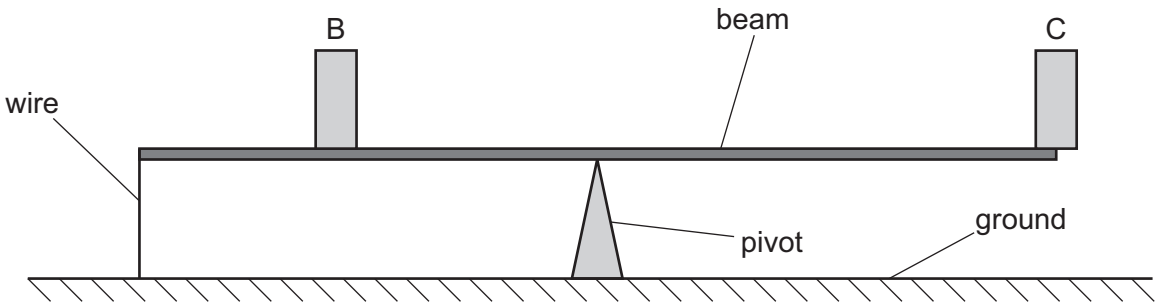

Fig. 2.2

After the change, the beam is again horizontal and in equilibrium. The positions of B and C are unchanged.

The wire has a diameter of 1.8×10^{-3} m and has a strain of 1.2×10^{-3}.
The wire is not extended beyond its limit of proportionality.

Calculate the Young modulus of the wire.

Young modulus = ... Pa [3]

(iii) Object B is now moved to a new position closer to the pivot without passing it. The beam is again horizontal and in equilibrium.

State and explain the effect, if any, that this has on the strain in the wire.

.....

.....

..... [2]

[Total: 9]

DO NOT WRITE IN THIS MARGIN
DO NOT WRITE IN THIS MARGIN
DO NOT WRITE IN THIS MARGIN
DO NOT WRITE IN THIS MARGIN
DO NOT WRITE IN THIS MARGIN

3 A car of mass 1500 kg is travelling along a straight horizontal road at constant velocity v. The car is subject to a total resistive force F, as shown in Fig. 3.1.

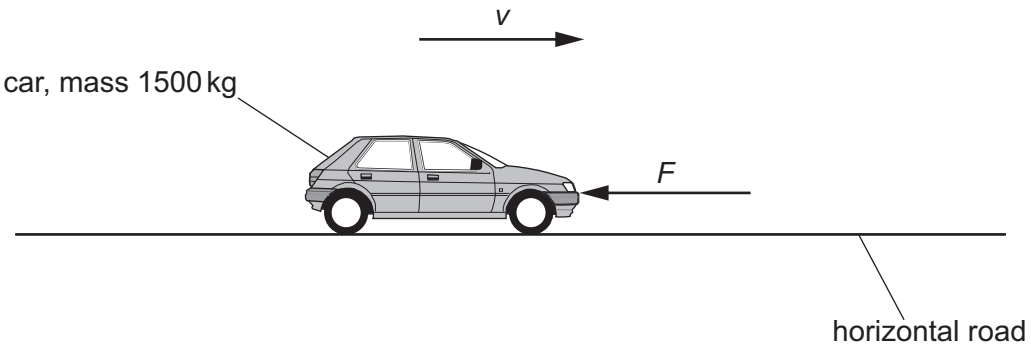

Fig. 3.1

(a) Show that the power P developed by the engine in overcoming the total resistive force is given by the equation

$$P = Fv .$$

[2]

(b) The car now moves up a slope at a constant speed of $30\,m\,s^{-1}$.
The slope is at an angle to the horizontal of 6.0°, as shown in Fig. 3.2.

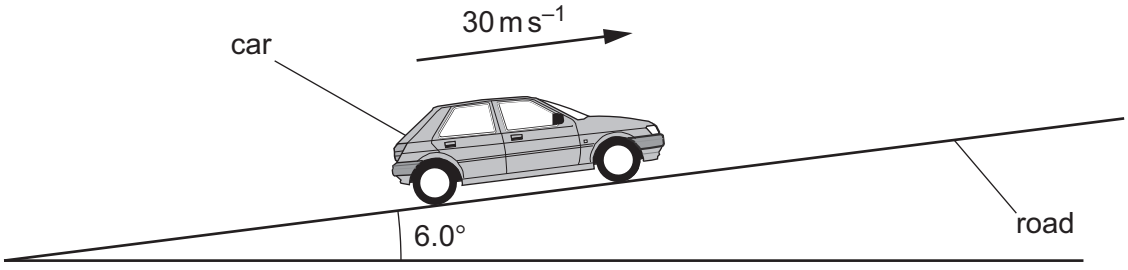

Fig. 3.2

The total resistive force acting on the car is 1600 N.

DO NOT WRITE IN THIS MARGIN

(i) Show that the increase in gravitational potential energy of the car in a time of 1.0 s is 46 000 J.

[2]

(ii) Use the information in **(b)(i)** to determine the power developed by the engine to move the car up the slope.

power = ... W [2]

(c) The car picks up a passenger and then continues up the slope at the same speed as in **(b)**.

State and explain the effect, if any, that the passenger has on:

(i) the air resistance acting on the car

.....

..... [1]

(ii) the power developed by the engine.

.....

..... [1]

[Total: 8]

DO NOT WRITE IN THIS MARGIN

BLANK PAGE

DO NOT WRITE IN THIS MARGIN
DO NOT WRITE IN THIS MARGIN
DO NOT WRITE IN THIS MARGIN
DO NOT WRITE IN THIS MARGIN
DO NOT WRITE IN THIS MARGIN

© UCLES 2025

4 **(a)** State the principle of conservation of momentum.

.....

.....

..... [2]

(b) An object A of mass 4.0 kg travels at a velocity of $6.0\,m\,s^{-1}$ to the right on a horizontal frictionless surface. It moves towards a second object B of mass 2.0 kg that is moving at a velocity of $3.0\,m\,s^{-1}$ in the same direction as A, as shown in Fig. 4.1.

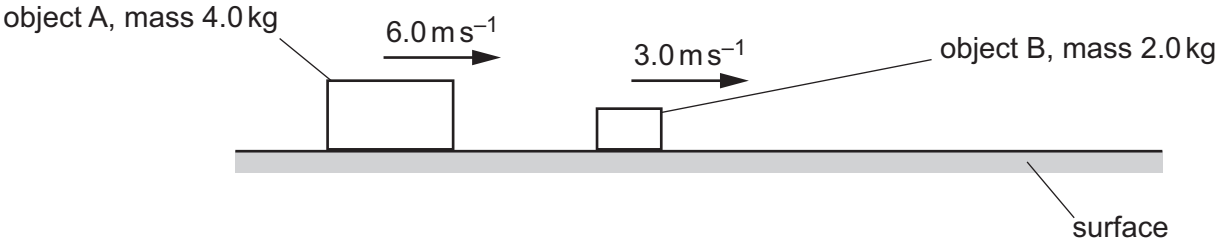

Fig. 4.1

Object A collides with object B. The two objects join and move off together with velocity *v*.

Calculate:

(i) velocity *v*

v = ... $m\,s^{-1}$ [2]

(ii) the percentage of the total initial kinetic energy of the two objects that is transferred to other forms of energy during the collision.

percentage = ...% [2]

[Total: 6]

DO NOT WRITE IN THIS MARGIN

5 **(a)** State why sound waves **cannot** be polarised.

.....

..... [1]

(b) A plane-polarised light wave is incident on a polarising filter as shown in Fig. 5.1.

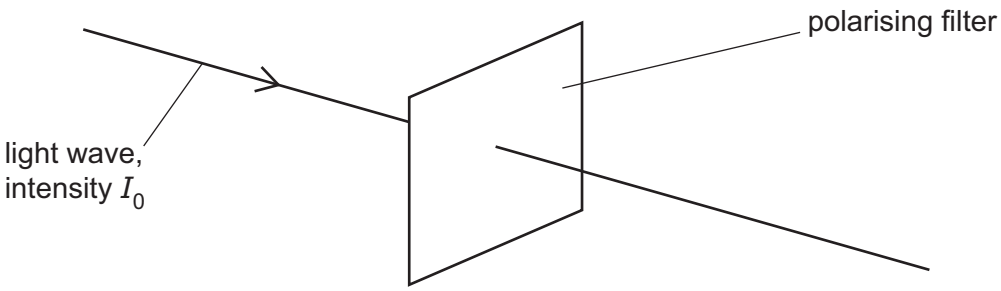

Fig. 5.1

The intensity of the light incident on the filter is I_0.

The light is incident normally on the filter and the transmission axis of the filter is initially perpendicular to the plane of polarisation of the light.

The filter is now rotated through 360° about the direction of travel of the light wave.

(i) On Fig. 5.2, sketch the variation of the intensity I of the transmitted light with the angle of rotation α as the filter is rotated through 360° from its initial position.

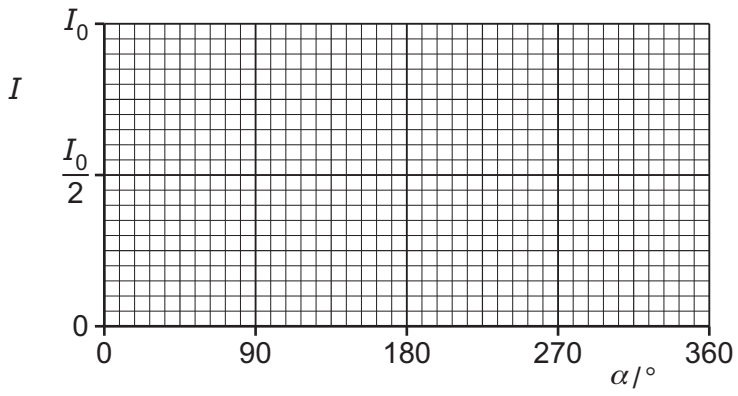

Fig. 5.2

[3]

DO NOT WRITE IN THIS MARGIN
DO NOT WRITE IN THIS MARGIN
DO NOT WRITE IN THIS MARGIN
DO NOT WRITE IN THIS MARGIN
DO NOT WRITE IN THIS MARGIN

(ii) The amplitude of the incident light wave is A_0 when the intensity of the wave is I_0.

Use Malus's law to determine, in terms of A_0, the amplitude of the transmitted wave when $\alpha = 20°$.

amplitude = ... A_0 [4]

[Total: 8]

DO NOT WRITE IN THIS MARGIN
DO NOT WRITE IN THIS MARGIN
DO NOT WRITE IN THIS MARGIN
DO NOT WRITE IN THIS MARGIN
DO NOT WRITE IN THIS MARGIN

6 **(a)** State what is meant by diffraction.

.....

..... [1]

(b) Light of wavelength 720 nm in a vacuum is incident normally on a diffraction grating as shown in Fig. 6.1.

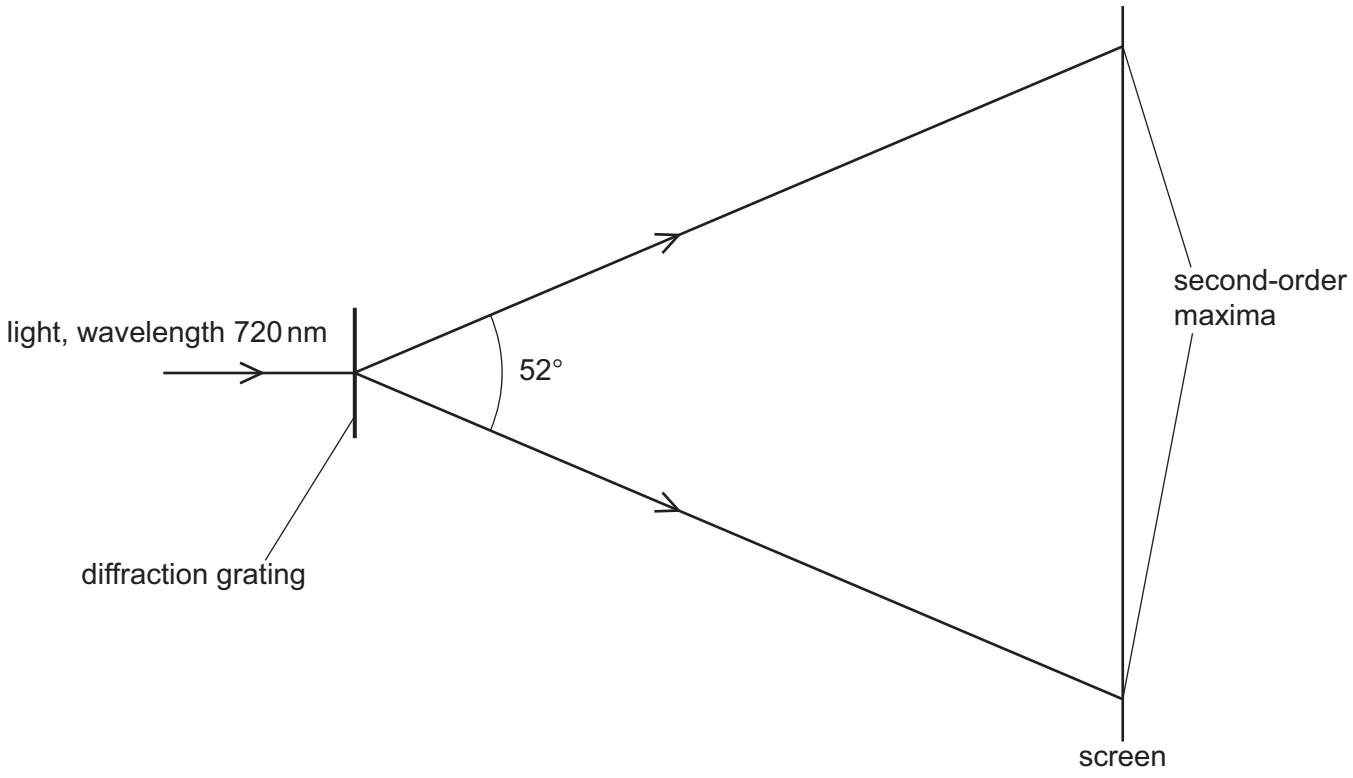

Fig. 6.1 (not to scale)

A screen is parallel to the grating. An interference pattern is seen on the screen and the angle between the **second**-order maxima is 52°.

(i) Calculate the frequency of the light.

frequency = ... Hz [2]

DO NOT WRITE IN THIS MARGIN

(ii) Calculate the number of lines per unit length in the diffraction grating.

number per unit length = ... m^{-1} [3]

(iii) The light in Fig. 6.1 is now replaced with light of a different wavelength λ. It is observed that the third-order maxima of this light are at the same positions as the second-order maxima of the light in Fig. 6.1.

Calculate, in nm, the wavelength λ.

λ = ... nm [2]

[Total: 8]

DO NOT WRITE IN THIS MARGIN

7 A nichrome resistance wire has length 150 cm, cross-sectional area $2.45 \times 10^{-7}\,m^2$ and resistivity $1.12 \times 10^{-6}\,\Omega\,m$.

(a) Calculate, to three significant figures, the resistance of the wire.

resistance = ... Ω [3]

(b) The nichrome wire forms part of a potentiometer circuit together with a cell of electromotive force (e.m.f.) 1.2 V and negligible internal resistance, as shown in Fig. 7.1.

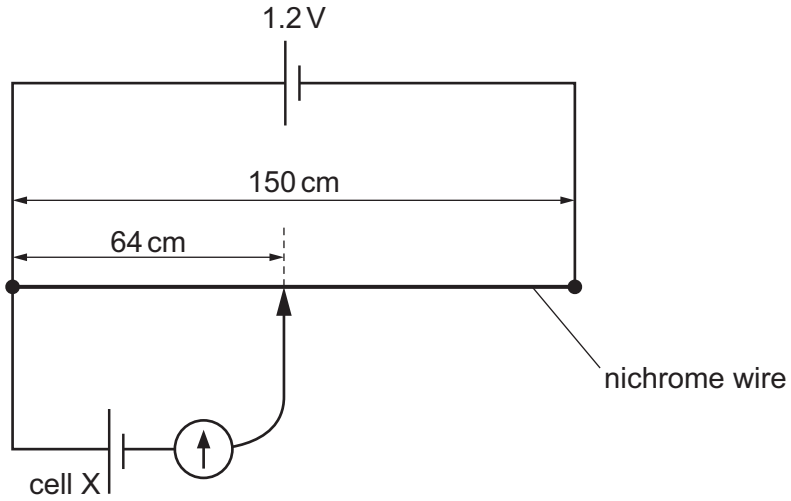

Fig. 7.1 (not to scale)

The circuit is used to determine the e.m.f. of cell X.

The galvanometer is used in a null method to find the null point 64 cm from the left-hand end of the nichrome wire.

(i) Explain what is meant by a null method.

.....

..... [1]

DO NOT WRITE IN THIS MARGIN

(ii) Calculate the e.m.f. of cell X.

e.m.f. = ... V [2]

(iii) The cell of e.m.f. 1.2 V is replaced by a new cell with the same e.m.f. but with an internal resistance that is **not** negligible.

State and explain the effect, if any, of the internal resistance of the new cell on the position of the null point.

.....

.....

.....

..... [2]

[Total: 8]

DO NOT WRITE IN THIS MARGIN
DO NOT WRITE IN THIS MARGIN
DO NOT WRITE IN THIS MARGIN
DO NOT WRITE IN THIS MARGIN
DO NOT WRITE IN THIS MARGIN

8 **(a)** An antiparticle equivalent of the neutron is called the antineutron. The quarks in the antineutron are the antiparticles of the quarks in a neutron.

The elementary charge is *e*.

In Table 8.1, state the flavour and charge of the three antiquarks that comprise the antineutron.

Table 8.1

flavour	charge / *e*

[3]

(b) In β^- decay, a neutron decays to form a proton.

Theory predicts that an antineutron should decay to form an antiproton. A particle and an antiparticle should also be observed.

Suggest the names of the particle and the antiparticle.

particle: .....

antiparticle: .....

[2]

[Total: 5]

DO NOT WRITE IN THIS MARGIN
DO NOT WRITE IN THIS MARGIN
DO NOT WRITE IN THIS MARGIN
DO NOT WRITE IN THIS MARGIN
DO NOT WRITE IN THIS MARGIN

BLANK PAGE

DO NOT WRITE IN THIS MARGIN
DO NOT WRITE IN THIS MARGIN
DO NOT WRITE IN THIS MARGIN
DO NOT WRITE IN THIS MARGIN
DO NOT WRITE IN THIS MARGIN

BLANK PAGE

DO NOT WRITE IN THIS MARGIN
DO NOT WRITE IN THIS MARGIN
DO NOT WRITE IN THIS MARGIN
DO NOT WRITE IN THIS MARGIN
DO NOT WRITE IN THIS MARGIN

Permission to reproduce items where third-party owned material protected by copyright is included has been sought and cleared where possible. Every reasonable effort has been made by the publisher (UCLES) to trace copyright holders, but if any items requiring clearance have unwittingly been included, the publisher will be pleased to make amends at the earliest possible opportunity.

To avoid the issue of disclosure of answer-related information to candidates, all copyright acknowledgements are reproduced online in the Cambridge Assessment International Education Copyright Acknowledgements Booklet. This is produced for each series of examinations and is freely available to download at www.cambridgeinternational.org after the live examination series.

Cambridge Assessment International Education is part of Cambridge Assessment. Cambridge Assessment is the brand name of the University of Cambridge Local Examinations Syndicate (UCLES), which is a department of the University of Cambridge.

© UCLES 2025